RLI8050PK

SPECIFICATION SHEET

WWW.CONENMOUNTS.COM

HEIGHT ADJUSTABLE DISPLAY AND MONITOR STAND, LITE SERIES WITH 50 CM OF VERTICAL TRAVEL

COLUMN SILVER, ANTI-COLLISION, LOW MODEL, FLOOR PLATE

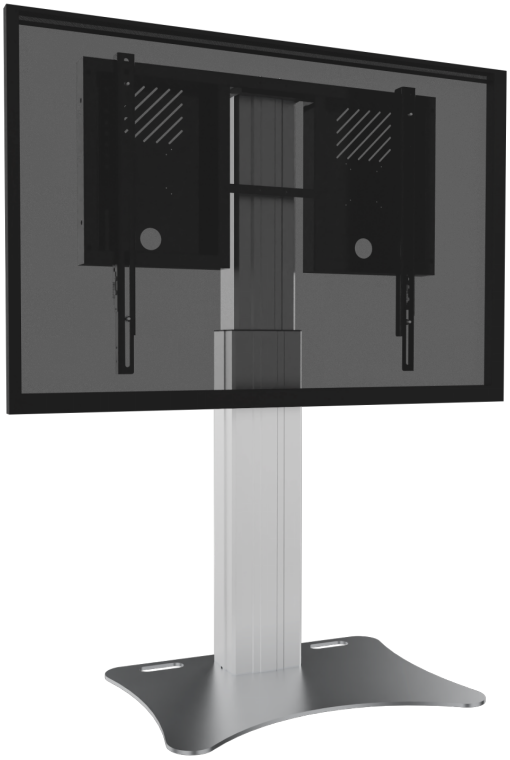

PRODUCT

Height adjustable display & monitor stand for 42"-75" (interactive) touch screen monitors.

The RLI8050PK adjustable monitor stand is designed for touch screen monitors up to 75". The units feature a sturdy monitor mount with integrated cable management and "pull & release" locking brackets for quick and easy mounting of the monitor.

The RLI8050PK monitor stand comes with a slim column that offers 50 cm of vertical travel.

A 0.3" thick, solid steel plate secures to the motorized center column. Designed for static, freestanding applications or to add stability to wall mount systems, secured to e.g. a stud wall. The floor plate features cut-outs/ handles for easy transportation. It comes powder coated in grey aluminum.

The unit comes flat-packed in 3 cartons and is courier-shippable.

Accessories

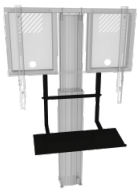

Keyboard shelf for LITE series

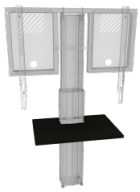

Front shelf for LIGHT system

Laptop side shelf

Universal PC bracket

FEATURES

- Heavy duty mount for touch screen monitors up to 75"
- "Pull & release" brackets for easy mounting of the monitor
- VESA pattern, max. 800 x 600
- Integrated cable management
- 50 cm of smooth motorized height adjustment, actuator 1500N, 47 mm/ 1.85" per second
- Floor plate and 2 wall mounting brackets for extra stability
- With anti-collision function
- Quick and easy mounting to the wall
- Wired remote control included

Display mount | Wall mounted | Motorized height adjustable | Single display | 5 years warranty | Max. load 136 kg / 299.8 lbs | Max. Vesa 800 x 600

CONEN

CONEN is not responsible for printing errors. CONEN reserves the right to change or modify pricing and product specifications with or without prior notification. Illustrations may not be exactly as shown. No parts may be reproduced by any means without prior authorization of CONEN.
All rights reserved 2024.

Item number	RLI8050PK	
Vesa horizontal / Vesa vertical	300 mm - 800 mm / 200 mm - 600 mm	
Frame for all	42" - 75"	
Center to floor distance	523 mm - 1023 mm	20.6" - 40.3"
Load capacity	136 kg	299.8 lbs
Width / Height / Depth	890 mm / 873 mm - 1373 mm / 166 mm	35" / 34.4" - 54.1" / 6.5"
Warranty	5 years limited warranty	
Frame color	RAL 9005 deep black	
Column color	Silver anodized	
Base color	RAL 9006 white aluminum	
Packages	**Package dimensions WxHxD**	**Package weight**
AFSCETARLI	895 x 65 x 485 mm / 35.2 x 2.6 x 19.1"	14 kg / 30.9 lbs
CCEL8050WK	1005 x 245 x 195 mm / 39.6 x 9.6 x 7.7"	19 kg / 41.9 lbs
PSTSCETALI	750 x 20 x 600 mm / 29.5 x 0.8 x 23.6"	21,8 kg / 48.1 lbs
Total weight		54,8 kg / 120.9 lbs

DIMENSIONS in mm / inch

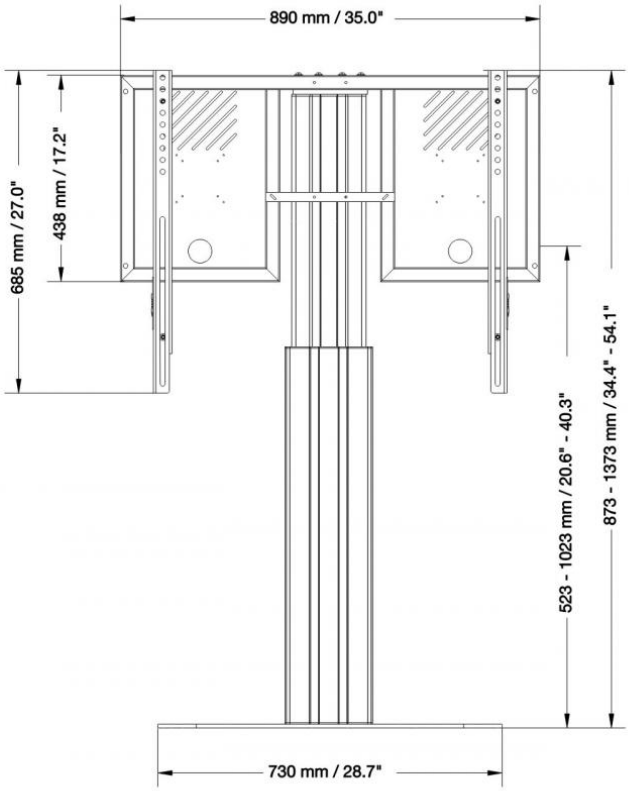

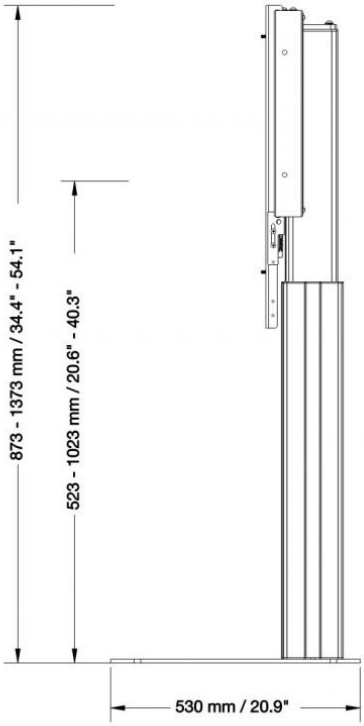

MANUFACTURER:

CONEN Produkte GmbH
Conenstr. 4
54497 Morbach-Gonzerath

Germany

Phone: +49 (0) 6533 75-100
Fax: +49 (0) 6533 75-600
E-Mail: info@conenmounts.com

www.conenmounts.com

CONEN

CONEN is not responsible for printing errors. CONEN reserves the right to change or modify pricing and product specifications with or without prior notification. Illustrations may not be exactly as shown. No parts may be reproduced by any means without prior authorization of CONEN.
All rights reserved 2024.