SCETADWB

ASSEMBLY INSTRUCTION

Adjustable mobile stand

for 70 – 120" display

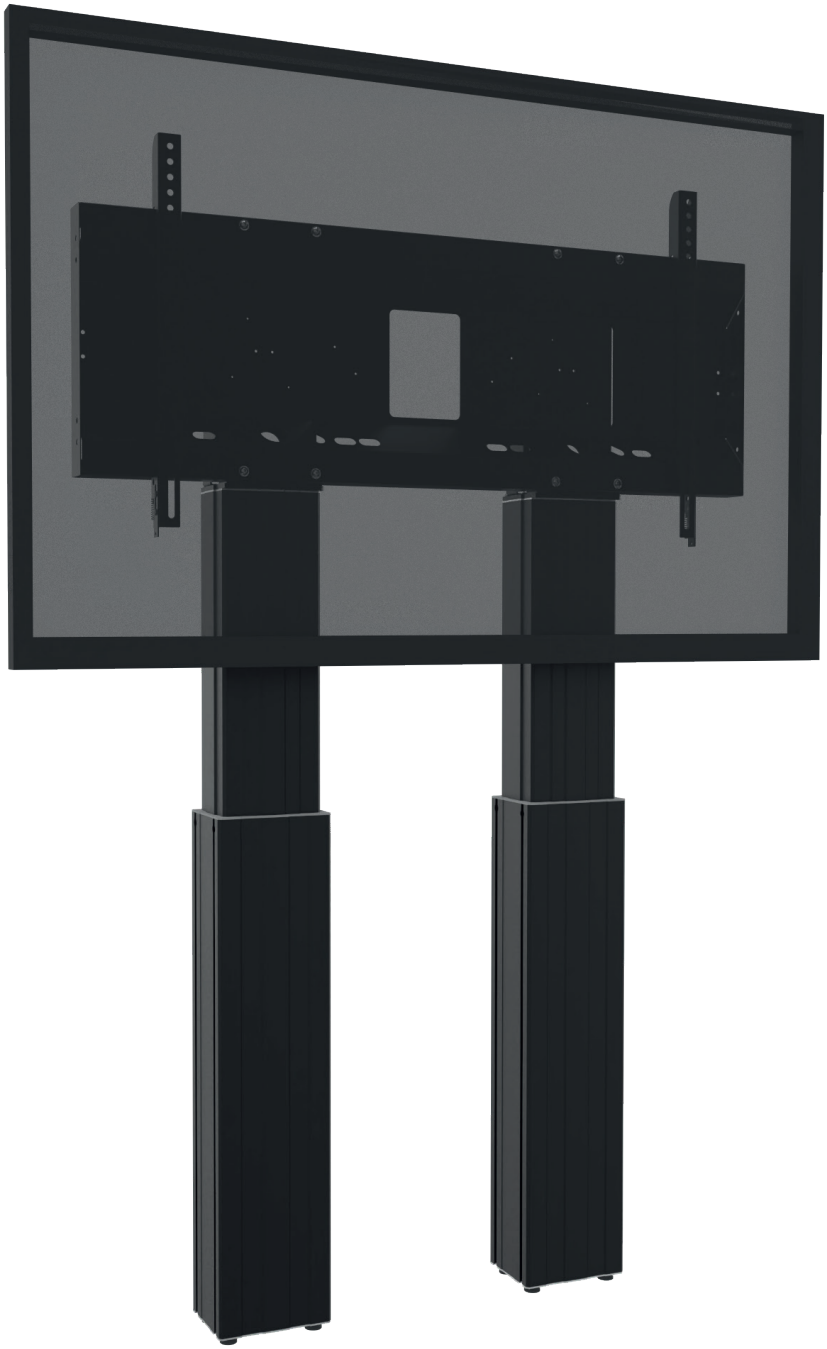

CONEN/01/2020

PACKAGE CONTENTS

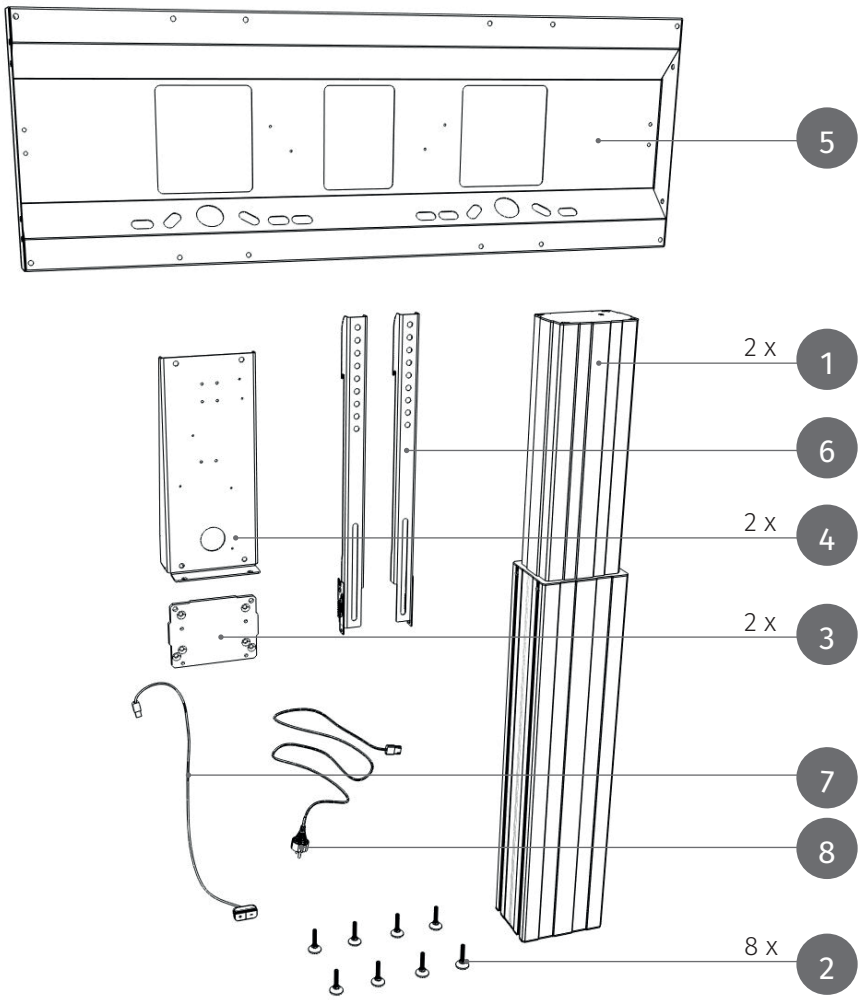

1 Center column

2 Adjustable feet

3 Adapterplate

4 Adapter

5 Display holder

6 Hook arms

7 Remote control

8 Power cable

A

4 x M8 x 40
Countersunk

B

4 x M8 x 40
Lenshead Allen screw with flange

C

8 x M8 x 10
Lenshead Allen screw with flange

D

8 x M8 x 75
Lenshead Allen screw with flange

E

8 x M8
self-locking nut

Depending on the display

F

4 x M8 x 16

F

4 x M6 x 16

Lenshead Allen screw with flange

G

1 x
Adhesive strip

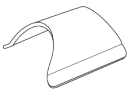

H

6 x
Cable clamp

For wall mounting

I

4 x
Sliding block

J

4 x M8
Self-locking nut

K

4 x
Z-Bracket

MOUNTING INSTRUCTIONS

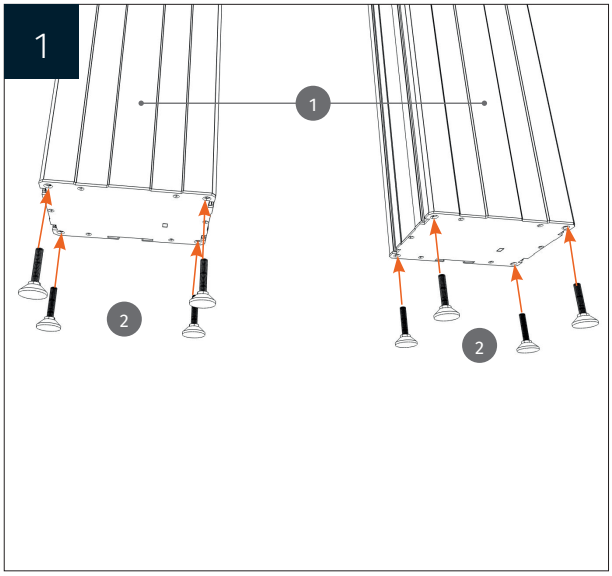

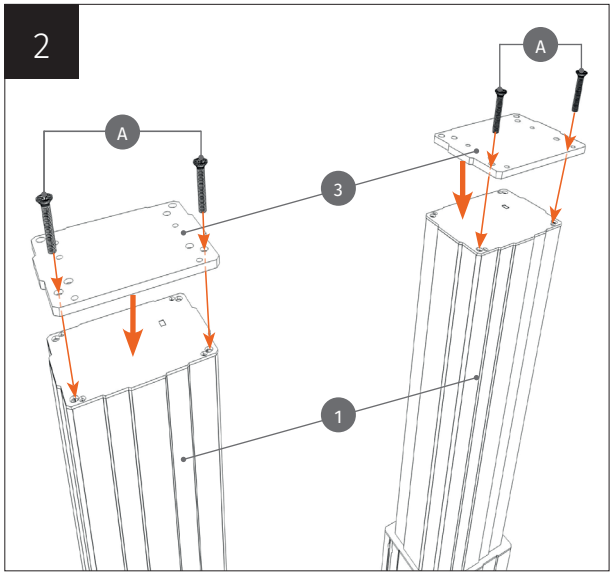

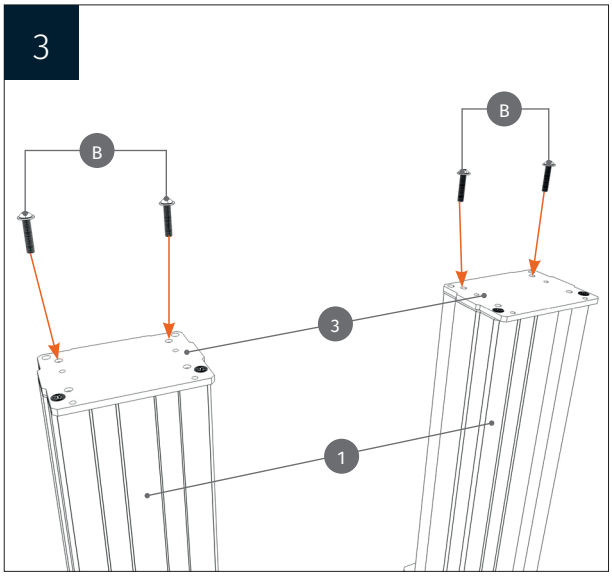

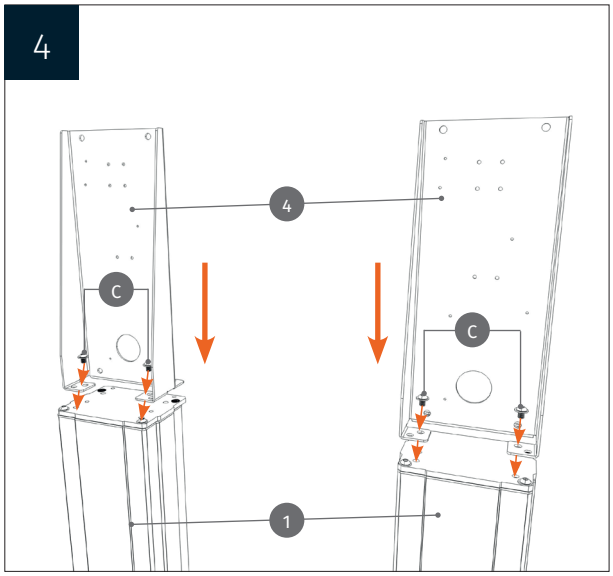

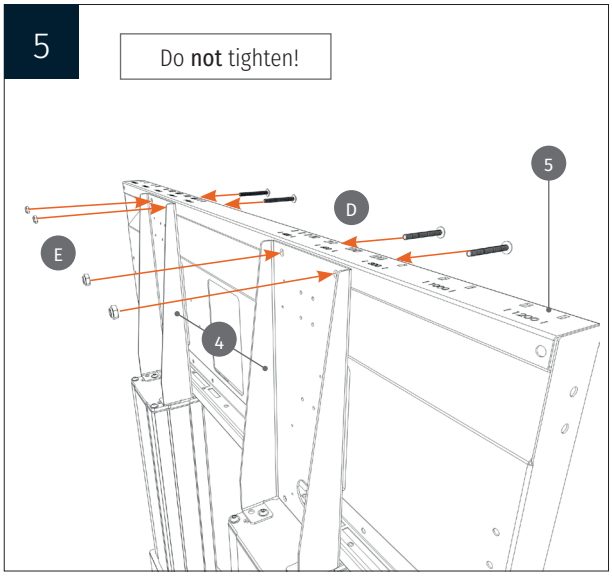

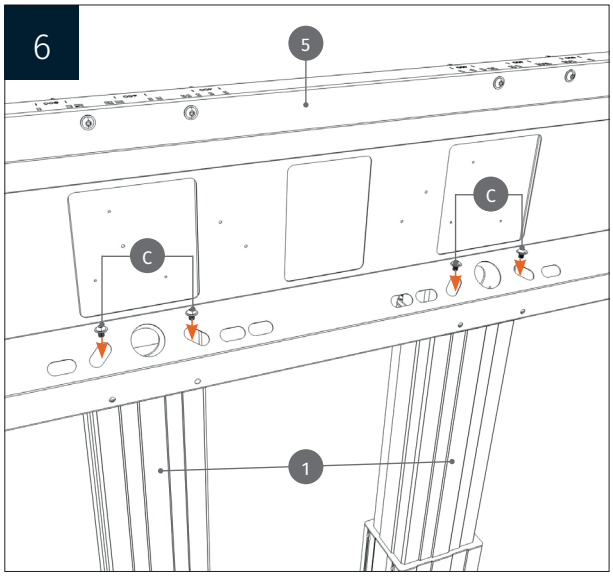

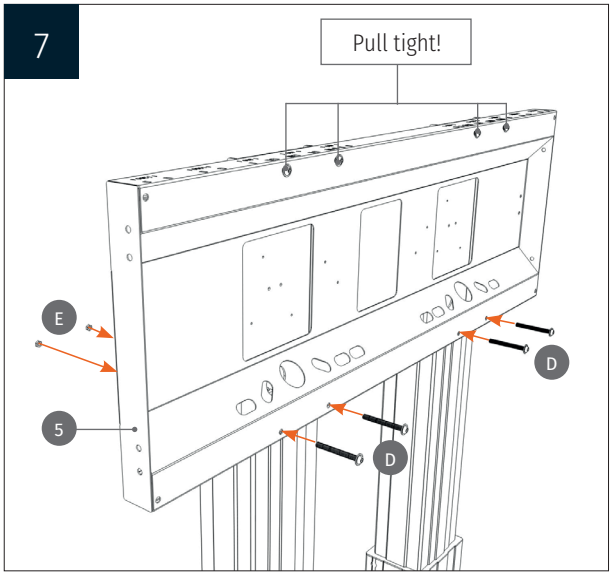
7
Pull tight!
E
5
D
D

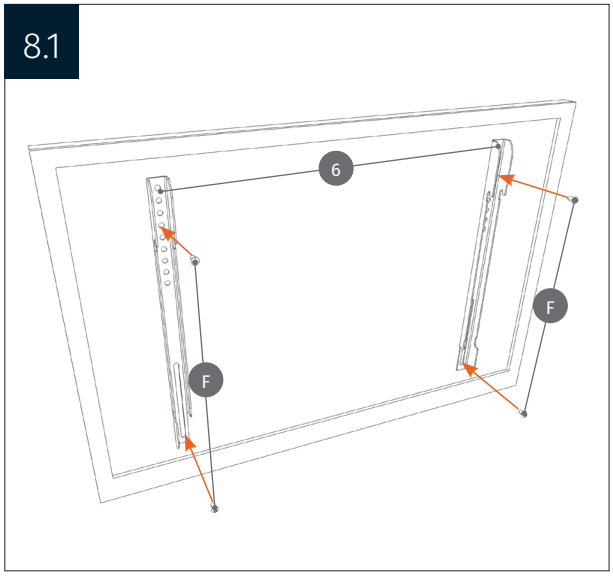
8.1
6
F
F

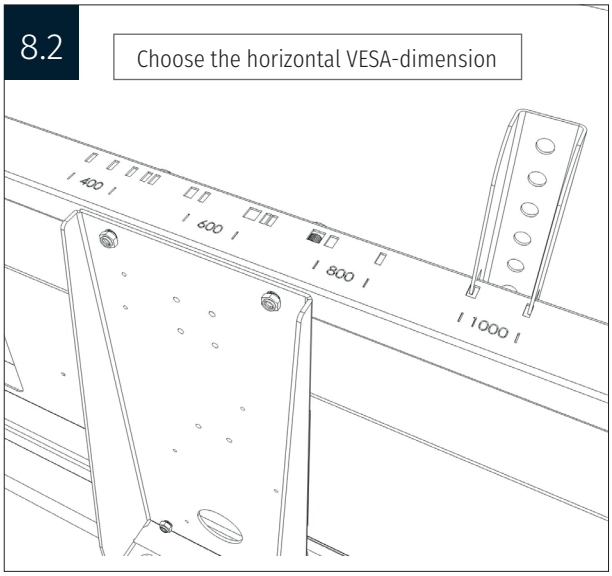
8.2
Choose the horizontal VESA-dimension
400
600
800
1000

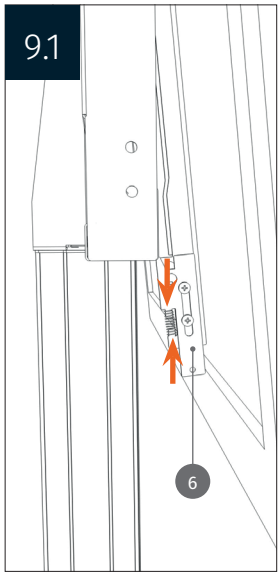
9.1
6

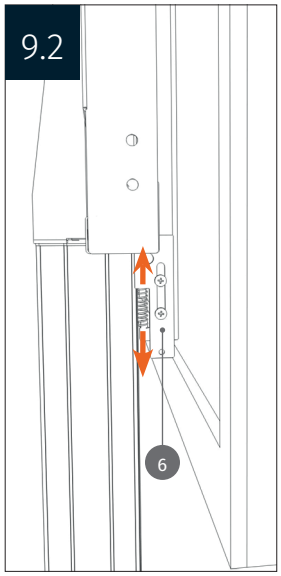
9.2
6

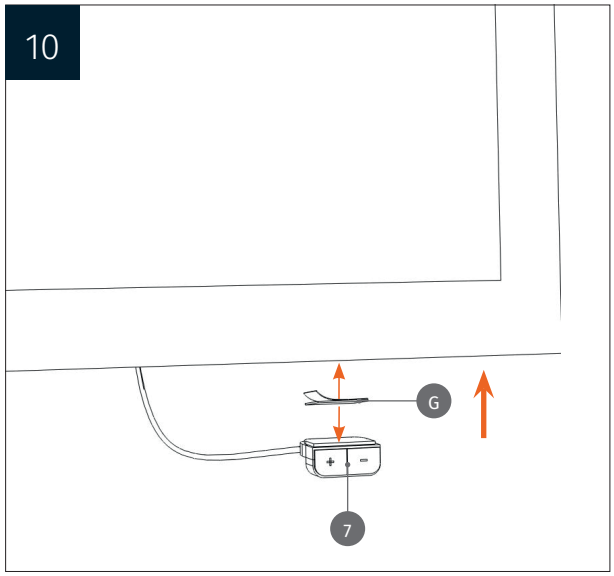
10
G
7

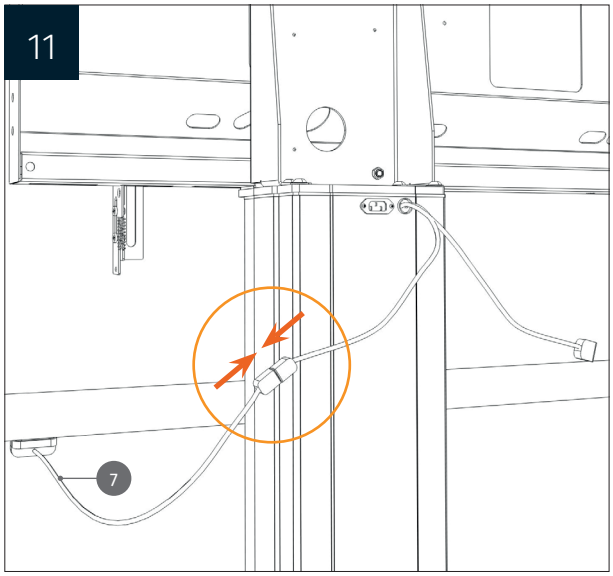
11
7

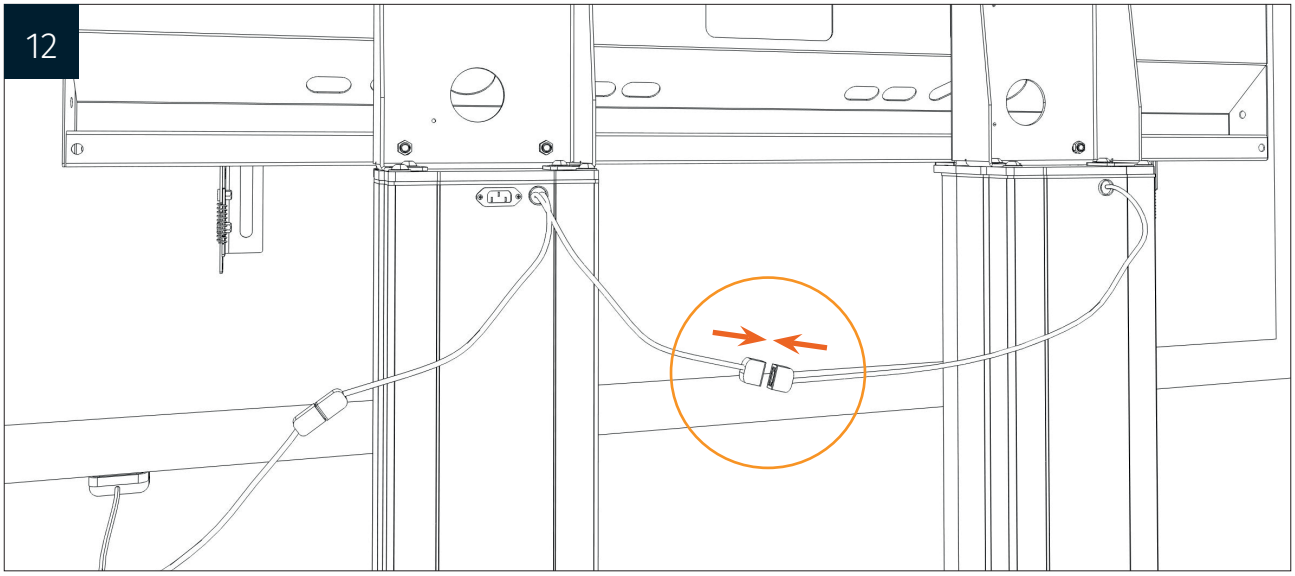
12

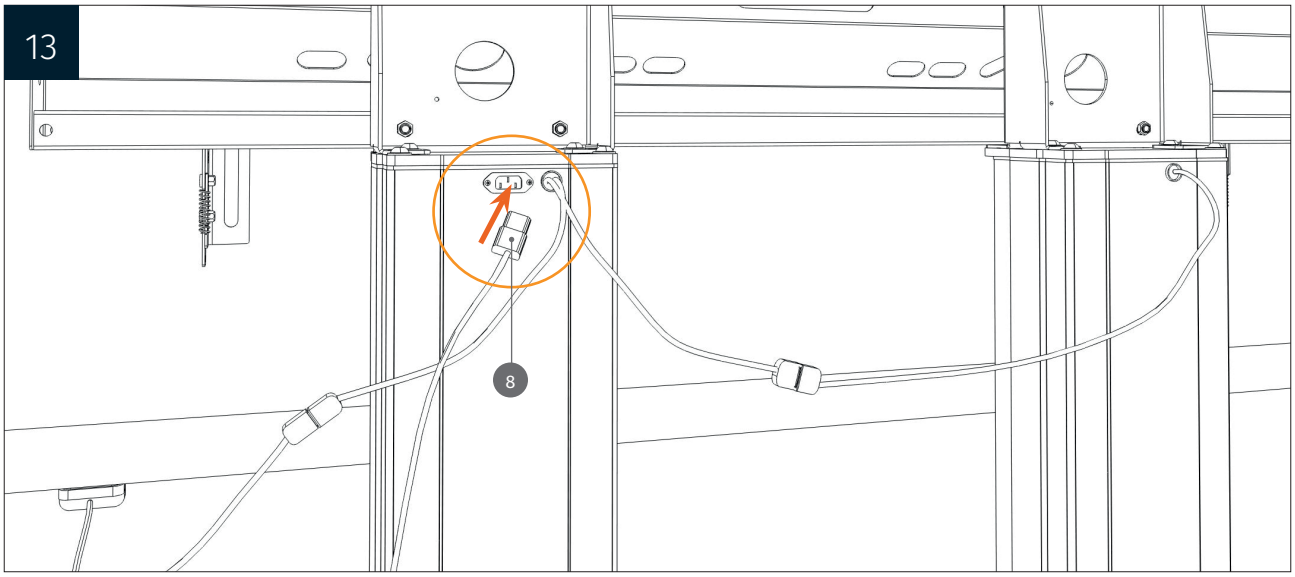
13
8

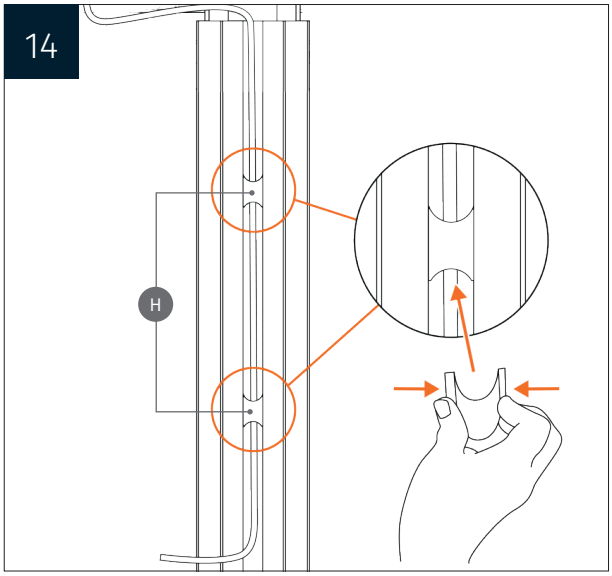
14
H

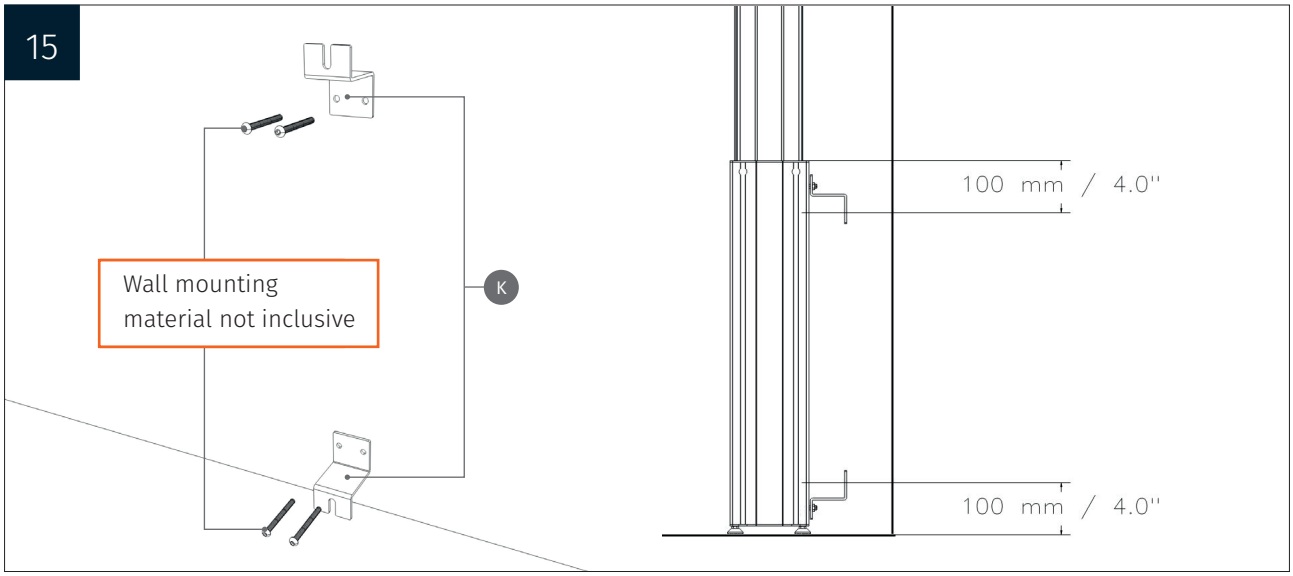
15
Wall mounting
material not inclusive
K
100 mm / 4.0''
100 mm / 4.0''

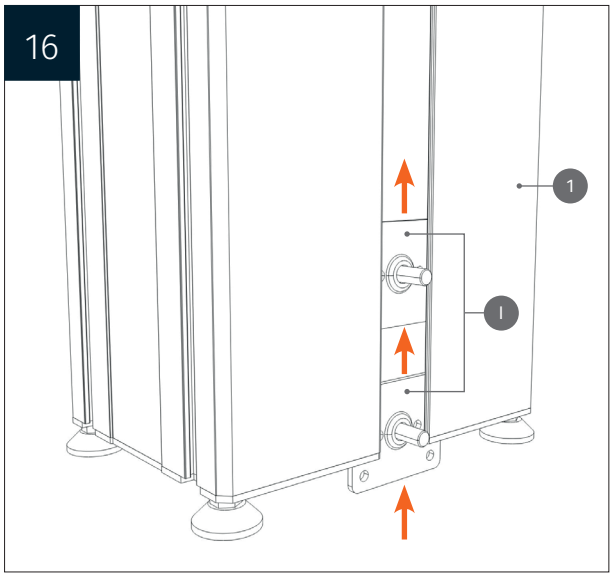
16
1
I

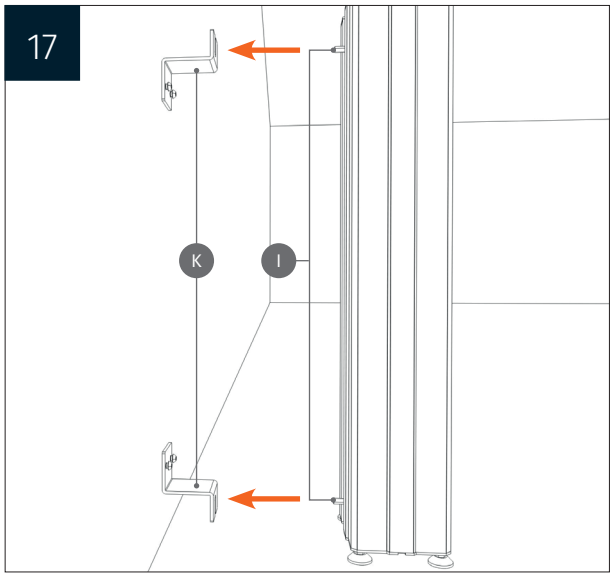
17
K
I

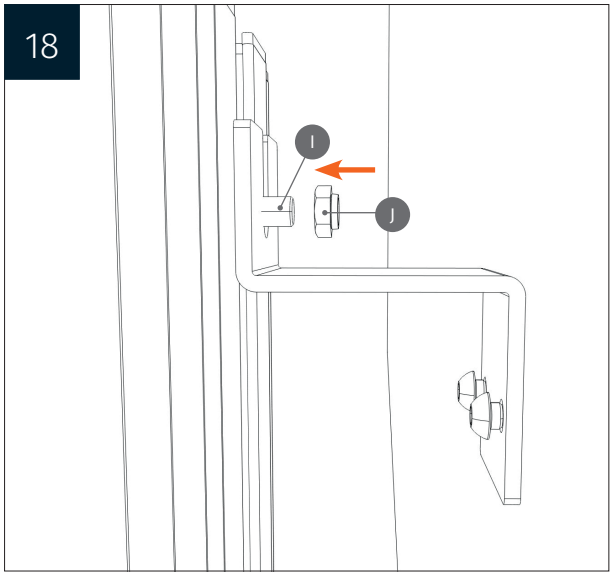
18
I
J

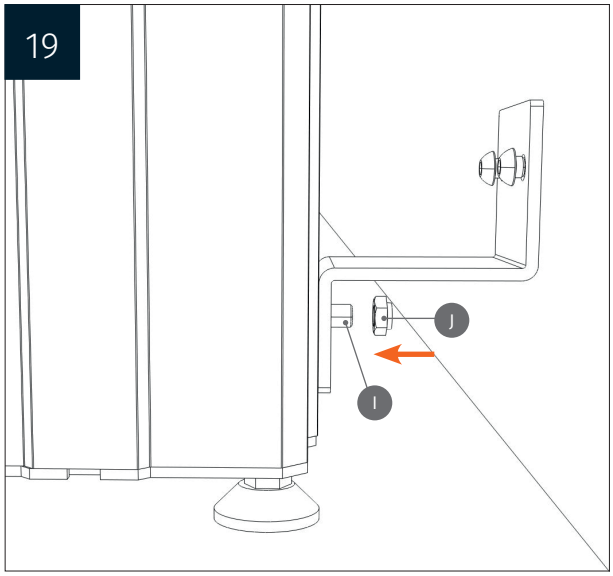
19
J
I

20

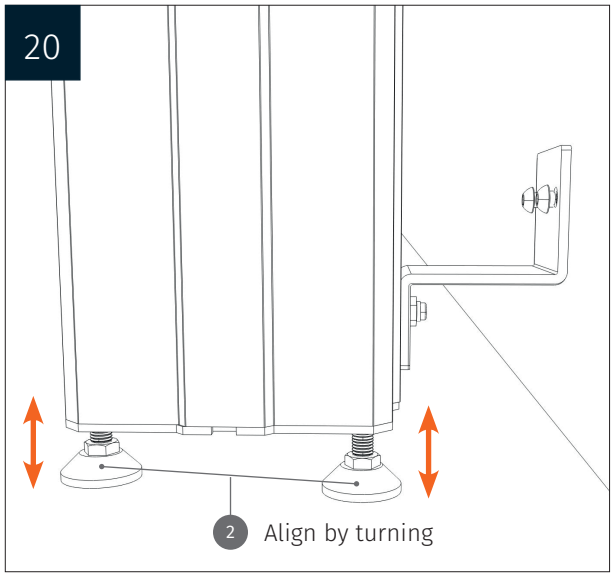

21

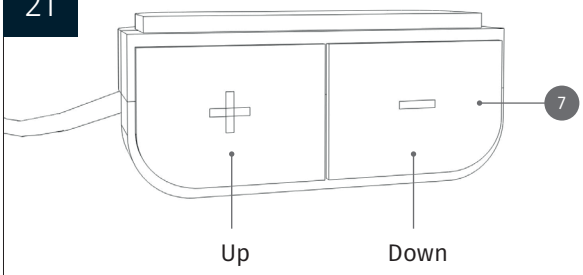

To adjust the height, keep pressed down the button + or − on the control unit.

Relasing the button will immediately stop the movement. In case of emergency, just unhand the control unit (deadman switch).