AFSCETAKBLI

SPECIFICATION SHEET

WWW.CONENMOUNTS.COM

KEYBOARD SHELF FOR CCELW-AF AND SCETAVLI SERIES

FOR MOUNTING TO DISPLAY BRACKET

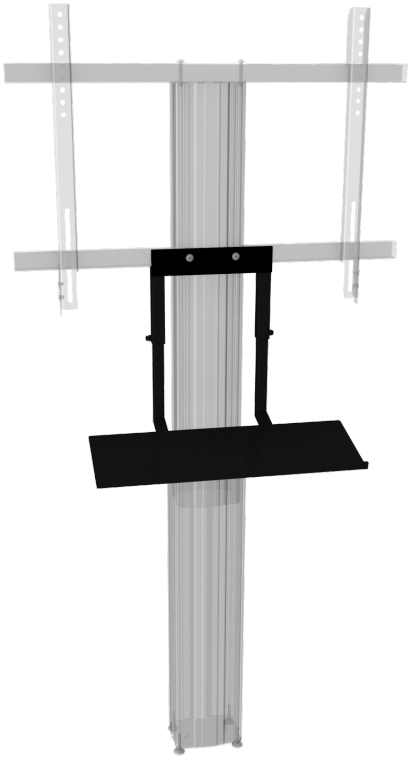

PRODUCT

Practical keyboard tray for attachment to the display mount CCELW-AF or SCETAVLI. This shelf for keyboards is black and ships including mounting hardware.

FEATURES

- Keyboard-shelf for mounting to the display mount
- Dimension: W/D: 600 x 200 mm
- Powder-coated steel, 2 mm, black (RAL 9005)
- Tube 30 x 30 mm/ 25 x 25 mm
- Includes mounting accessories (2x Allen head lens screws)

Display mount

CONEN is not responsible for printing errors. CONEN reserves the right to change or modify pricing and product specifications with or without prior notification. Illustrations may not be exactly as shown. No parts may be reproduced by any means without prior authorization of CONEN.
All rights reserved 2025.

Item number	AFSCETAKBLI	
Width / Height / Depth	600 mm / 374 mm - 500 mm / 344 mm	23.6" / 14.7" - 19.7" / 13.5"
Weight	4,4 kg	9.7 lbs
Packages	Package dimensions WxHxD	Package weight
AFSCETAKBLI	630 x 110 x 260 mm / 24.8 x 4.3 x 10.2"	5 kg / 11 lbs

DIMENSIONS in mm / inch

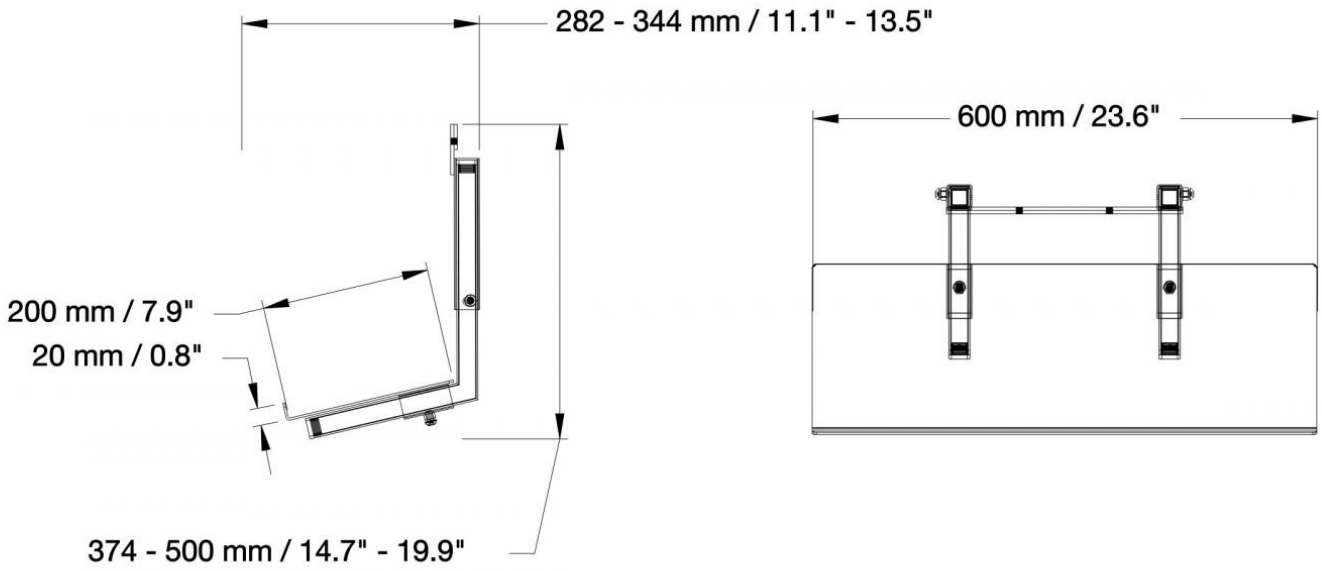

MANUFACTURER:

CONEN Produkte GmbH
Conenstr. 4
54497 Morbach-Gonzerath

Germany

Phone: +49 (0) 6533 75-100
Fax: +49 (0) 6533 75-600
E-Mail: info@conenmounts.com

www.conenmounts.com

CONEN is not responsible for printing errors. CONEN reserves the right to change or modify pricing and product specifications with or without prior notification. Illustrations may not be exactly as shown. No parts may be reproduced by any means without prior authorization of CONEN.
All rights reserved 2025.